STB7100

Low-cost set-top box decoder chip for MPEG-4 AVC and HD MPEG-2

DATA BRIEF

DESCRIPTION

Demonstrating its continued leadership in STB ICs, STMicroelectronics introduces the first fully integrated high-definition set-top box IC with an advanced low-bit rate video decoder.

The STB7100 is a single-chip video decoder supporting the H.264/AVC advanced video decoding standard, Microsoft's VC1 standard and high definition MPEG2. As well as STBs, the STB7100 can be used in DVD and automotive applications.

The STB7100 demultiplexes, descrypts, decodes and outputs HD and SD video streams with associated multi-channel audio. A dual display compositor provides mixing of graphics and video with independent composition for TV/monitor and VCR outputs. SATA and USB interfaces are provided to enable low-cost connectivity to hard-disk drives and low-cost system expansion.

Package (35 x 35 PGBA)



Figure 1. H.264/AVC low-bit rate set-top box decoder

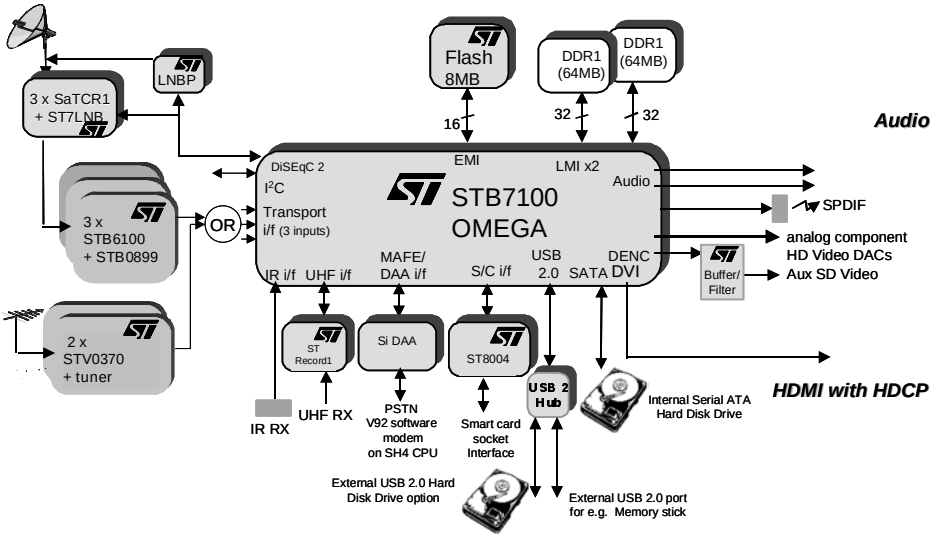

FEATURES

- 300 MHz SH4-202 CPU core
- Linux and WindowsCE capable
- Transport stream merger/router
- Programmable transport stream interface (PTI)
- Advanced video decoder
  - H264/AVC HP@L4 and MPEG2 MP@HL
  - Microsoft VC1
- Graphics engine/blitter
- Dual display composition
  - High definition and standard definition
- Main and auxiliary output video DACs
- DVI, HDMI output
- Digital video & audio inputs
- Programmable audio decoder
  - MPEG1 I/II, MP3, Dolby® digital, AAC LC, high efficiency AAC
- USB 2.0 host controller
- DVR capable with a serial ATA HDD interface.

PART NUMBERING

Table 1. Order codes

Part Number	Description
STB7100	HD H.264 STB decoder
STB7100-Mboard	Evaluation platform

REVISION HISTORY

Table 2. Revision history

Date	Revision	Description of changes
December-2004	1	First issue

Information furnished is believed to be accurate and reliable. However, STMicroelectronics assumes no responsibility for the consequences of use of such information nor for any infringement of patents or other rights of third parties which may result from its use. No license is granted by implication or otherwise under any patent or patent rights of STMicroelectronics. Specifications mentioned in this publication are subject to change without notice. This publication supersedes and replaces all information previously supplied. STMicroelectronics products are not authorized for use as critical components in life support devices or systems without express written approval of STMicroelectronics.

The ST logo is a registered trademark of STMicroelectronics.

All other names are the property of their respective owners

© 2004 STMicroelectronics - All rights reserved

STMicroelectronics group of companies

Australia - Belgium - Brazil - Canada - China - Czech Republic - Finland - France - Germany - Hong Kong - India - Israel - Italy - Japan - Malaysia - Malta - Morocco - Singapore - Spain - Sweden - Switzerland - United Kingdom - United States of America

www.st.com

This datasheet has been download from:

www.datasheetcatalog.com

Datasheets for electronics components.